When the brain plays music: auditory–motor interactions in music perception and production

Robert J. Zatorre[*‡], Joyce L. Chen*[*‡] and Virginia B. Penhune*[§‡]

Abstract | Music performance is both a natural human activity, present in all societies, and one of the most complex and demanding cognitive challenges that the human mind can undertake. Unlike most other sensory–motor activities, music performance requires precise timing of several hierarchically organized actions, as well as precise control over pitch interval production, implemented through diverse effectors according to the instrument involved. We review the cognitive neuroscience literature of both motor and auditory domains, highlighting the value of studying interactions between these systems in a musical context, and propose some ideas concerning the role of the premotor cortex in integration of higher order features of music with appropriately timed and organized actions.

Rhythm
The local organization of musical time. Rhythm is the pattern of temporal intervals within a musical measure or phrase that in turn creates the perception of stronger and weaker beats.

Whether it is a child singing 'Happy Birthday,' or a concert pianist interpreting a Brahms concerto, the neural mechanisms involved in producing and perceiving music provide a rich source of questions for cognitive neuroscience. The interaction between auditory and motor systems is of particular interest, because each action in a performance produces sound, which influences each subsequent action, leading to remarkable sensory–motor interplay (FIG. 1). Although much research has been carried out into sensory–motor interactions in processes such as reaching and grasping and speech, these actions do not fully capture the requirements of musical execution. Performing even a simple musical piece requires precise control of timing over an extended period in order to follow a hierarchical rhythmic structure, and also requires the musician to control pitch so as to produce specific musical intervals (frequency ratios), which is not relevant in speech (even tonal languages do not rely on specific intervals, but rather on pitch contours). Thus, music makes some unique demands on the nervous system, an understanding of which should in turn help to reveal particular aspects of neuronal function. In this Review, we provide an overview of what is known so far about motor control and tonal perception as applied to music, followed by a discussion of the neural mechanisms that may mediate their interaction. We conclude with some hypotheses about the functional architecture involved in music perception and production, and suggest some ideas for future work.

Music production: motor control systems

When a musician performs, at least three basic motor control functions are required: timing, sequencing and spatial organization of movement. The accurate timing of movements is related to the organization of musical rhythm, whereas sequencing and spatial aspects of movement relate to playing individual notes on a musical instrument. Although a large number of studies have examined the neural systems underlying these functions separately, little is known about how they work together to produce a complex musical performance. In addition, there is considerable debate regarding both the definition of these motor parameters and the specific contributions of particular brain regions to their control. The study of music production requires these systems to be studied in an integrated fashion, thus making it both a challenging and fruitful model system for research into sensory–motor integration.

Timing. The neural mechanisms that underlie the timing of movement have been intensively studied over the past 20 years, but currently there is more controversy than consensus in this field. The ability to time movement precisely has been attributed to a neural clock or counter mechanism in which time is represented through pulses or oscillations[1–4], but it has also been hypothesized to be an emergent property of the kinematics of movement itself[3,5,6]. Functional neuroimaging studies, as well as studies of brain-damaged patients, have linked

*Montreal Neurological Institute, McGill University, 3801 University Street, Montreal, Quebec, Canada.
‡BRAMS Laboratory, 1430 Mont-Royal West, Montreal, Quebec, Canada.
§Psychology Department, Concordia University, 4000 Sherbrooke Street W, Montreal, Quebec Canada.
Correspondence to R.J.Z.
e-mail:
robert.zatorre@mcgill.ca
doi:10.1038/nrn2152

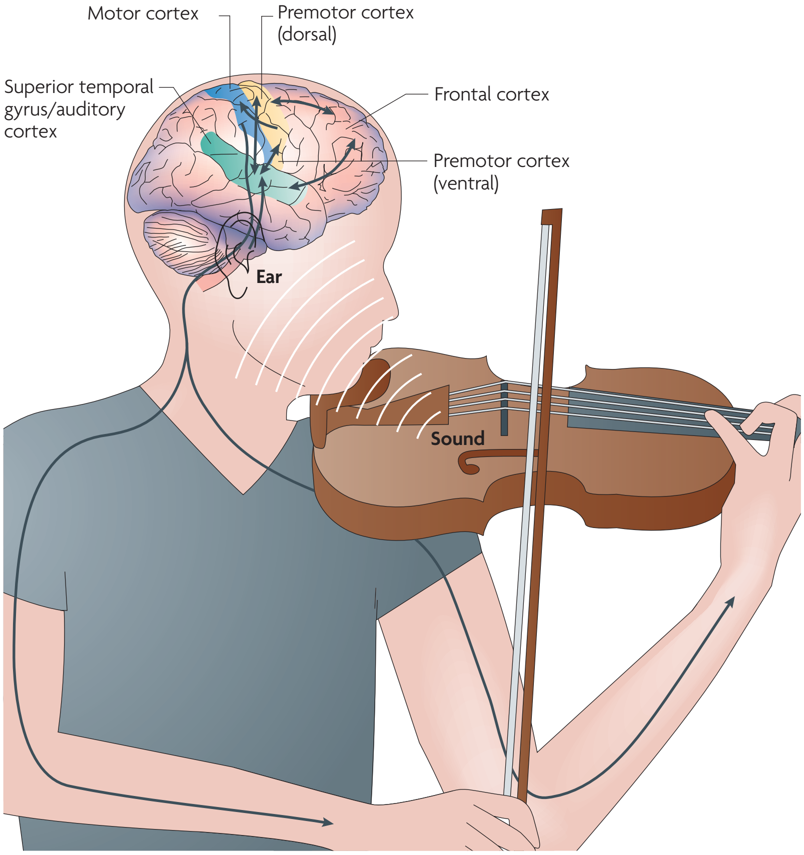

Figure 1 | **Auditory–motor interactions during musical performance.** This figure illustrates the feedback and feedforward interactions that occur during music performance. As a musician plays an instrument, motor systems control the fine movements needed to produce sound. The sound is processed by auditory circuitry, which in turn is used to adjust motor output to achieve the desired effect. Output signals from premotor cortices are also thought to influence responses within the auditory cortex, even in the absence of sound, or prior to sound; conversely, motor representations are thought to be active even in the absence of movement on hearing sound. There is therefore a tight linkage between sensory and production mechanisms.

movement timing to several cortical and sub-cortical regions, including the cerebellum, basal ganglia and supplementary motor area (SMA). It has been proposed that the basal ganglia and possibly the SMA may be more important for interval timing at longer timescales (1 second and above), whereas the cerebellum may be more important for controlling motor timing at shorter timescales (millisecond)[1,7].

Studies have shown that patients with cerebellar lesions have an impaired ability to complete perceptual and motor timing tasks[8], and neuroimaging studies have shown cerebellar activity in relation to movement timing[9,10]. Although some studies have failed to support a direct contribution of the cerebellum to timing[11], current theories of cerebellar function suggest it may have a role in feedforward control or error correction — both of these functions would be relevant for timing. Several researchers have proposed that the cerebellum computes predictive models of movement that would include movement timing[12,13], whereas others suggest that it is most important for online error correction based on feedback, which would also contribute to optimization of timing[14]. The cerebellum may contribute to the precise control of movement trajectories, which are related to accurate timing,[15,16], and it has been shown to have a role in the acquisition and integration of sensory information[17]. When subjects perform purely auditory perceptual tasks, neuroimaging studies consistently show cerebellar activity[18].

Studies have suggested that the basal ganglia are also directly involved in movement timing. Patients with Parkinson's disease, who have damage in the basal ganglia system, show impaired movement timing[19]. Furthermore, neuroimaging studies have shown that the basal ganglia are active in tasks that require timed finger tapping[20,21]. It has also been suggested that the basal ganglia may be involved in controlling specific motor parameters, such as force, which contribute to accurate timing[22].

Many of these studies have examined very simple rhythms, usually requiring participants to tap a single finger to a constant beat. Although such tasks reveal important basic properties of perceptual and motor timing, it is not clear whether neural models based on these simple tasks are adequate for complex tasks like musical performance. Several recent experiments have examined perception and reproduction of more complex musical rhythms. These studies have shown greater involvement of the dorsal premotor cortex (dPMC), lateral cerebellar hemispheres and the prefrontal cortex[23,24,25]. It is not known whether these changes in brain activity are directly related to the temporal complexity of the rhythms or to other parameters such as sequence complexity, or the degree to which rhythmic structure allows subjects to predict and organize their motor performance. These results indicate that motor timing is not controlled by a single brain region, but by a network of regions that control specific parameters of movement and that depend on the relevant timescale of the rhythmic sequence. High-level control of sequence execution appears to involve the basal ganglia, PMC and SMA, whereas fine-grain correction of individual movements may be controlled by the cerebellum.

Sequencing. Motor sequencing has been explored in terms of either the ordering of individual movements, such as finger sequences for key presses, or the coordination of subcomponents of complex multi-joint movements. Several cortical and sub-cortical regions, including the basal ganglia, the SMA and the pre-SMA, the cerebellum, and the premotor and prefrontal cortices, have been implicated in the production and learning of motor sequences, but their specific contributions and the way they work together are not yet clear. Neurophysiological studies in animals have demonstrated an interaction between the frontal cortex and basal ganglia during the learning of movement sequences[26]. Human neuroimaging studies have also emphasized the contribution of the basal ganglia for well-learned sequences[27]. It has been argued that the cerebellum is important for sequence learning and for the integration of individual movements into unified sequences[27,28–31], whereas the pre-SMA and SMA have been shown to

Pitch
A percept according to which periodic sounds may be ordered from low to high. Musical pitch has complex properties related to scales, and is often represented as a helix. Perceived pitch most often corresponds to the fundamental frequency, even in its absence, owing to the presence of harmonics that are directly related to the fundamental frequency.

Kinematics
Parameters of movement through space without reference to forces (for example, direction, velocity and acceleration).

be involved in organizing or chunking of more complex movement sequences[32,33]. Finally, the premotor cortex has been shown to be involved in tasks that require the production of relatively complex sequences, and it may contribute to motor prediction[34,35]. Sequencing has also been studied in a more musical context in an experiment that examined neural activity during the execution of sequences of key-presses that differed either in temporal or sequential complexity[23]. This study showed that more complex sequences required activity from the basal ganglia, dPMC and cerebellum.

Spatial organization. Expert musical performance requires precise spatial organization of movements. Few studies of complex motor control have distinguished between the spatial and sequential components of a series of movements. Studies in animals and humans have established the involvement of parietal, sensory–motor and premotor cortices in the control of movements when the integration of spatial, sensory and motor information is required[36,37]. More recent work has suggested that separate neural systems may underlie the ability to learn and produce the spatial and sequential components of a complex task[29,38]. Surprisingly, few studies have explicitly examined the role of spatial processing in the context of musical tasks. A behavioural study of spatial accuracy in trained cellists found that they do not show the typical distance/accuracy trade-off for finger movements while playing[39]. A recent neuroimaging study contrasting sequential and temporal sequence learning[23] suggested that the dPMC may have a role in the learning of spatial trajectories. Overall, however, the contribution of spatial processing to music-related motor tasks remains an area in which future work could make an important contribution.

Music perception: auditory processing streams

Considerable progress has been made in models of auditory cortex anatomy. The scenario now emerging is that of a hierarchical system in which several distinct pathways emerge from the primary auditory cortex (A1), projecting towards different targets[40,41]. There is at least one stream projecting ventrally from A1 within the temporal neocortex, and quite possibly a second stream projecting anteriorly along the superior temporal gyrus (STG)[42]. Another stream follows a more dorsal and posterior course, reaching parietal targets. The functional properties of these pathways are less clear. One model suggests that ventral and dorsal streams may parallel the visual system in supporting object and spatial processing, respectively[40]. As discussed below, the dorsal stream may also be conceptualized as playing a part in auditory–motor transformations[43], analogous to the role proposed for the visual dorsal stream[44]. A related view is that dorsal areas may track changes in spectral energy over time, offering a functional parallel to vision, insofar as retinotopic and cochleotopic mapping may require similar cortical computational mechanisms[45]. According to these views, the dorsal auditory cortical pathway is relevant for spatial processing, and tracks time-varying events. Therefore, a link to motor systems would make sense, as movements occur in time as well as in space. Conversely, ventral pathways are thought to be specialized for invariant auditory object properties[46,47], which are time-independent[48], and therefore less related to motor systems.

Pitch. One of the most salient features of sound relevant for music is pitch. Neurons lateral to A1 in the marmoset were found to be sensitive specifically to the fundamental frequency of a complex tone[49], suggesting that pitch constancy may be enabled by such a neural mechanism. The importance of cortical regions lateral to A1 for pitch coding is also supported by human lesion and functional magnetic resonance imaging (fMRI) studies[50–52]. These data suggest a hierarchical system for pitch processing, with more abstract properties of the stimulus encoded as one proceeds along the processing streams. The precise nature of this coding becomes less well understood for more distal components of the streams, but patterns of pitches unfolding over time — that is, a melody — are known to engage neural populations in both anterior and posterior auditory pathways[53]. Such results suggest that different parameters of a tune (such as global contour, specific interval sizes or local duration ratios of tones) might be processed in the different streams. It is uncertain what specific computations the posterior regions are carrying out, but we postulate that sensitivity to temporal expectations might be one such function, in accordance with the idea that posterior auditory regions have a privileged link to motor regions.

Hemispheric asymmetries. Lateralization of cortical responses is also an important aspect of tonal processing, with much empirical data favouring a right-hemisphere advantage for tonal functions. One explanation for this phenomenon is that hemispheric asymmetries arise from fundamental differences in acoustical processing (such as spectrotemporal resolution[54] or time integration windows[55]) — neuroimaging studies in which acoustical features are manipulated tend to support such a view[55,56]. Alternatively, hemispheric differences may be related to abstract knowledge domains, such as language[57]. These views are not mutually exclusive[58] but, regardless of the model, the stage within the processing streams at which such hemispheric differences are manifested remains poorly understood, leading one to ask how these processing differences influence neural operations in downstream areas. Therefore, one key question is the extent to which lateralization of perceptual processes may influence lateralization of motor processes, as these have mostly been studied independently so far[59]. Moreover, top-down influences of abstract knowledge, such as musical syntax, may also have important implications[60] for patterns of laterality.

Rhythm. In addition to pitch or melody, music relies on rhythm. Behavioural studies demonstrate that rhythm and pitch can be perceived separately[61], but that they also interact[62] in creating a musical percept. Neuropsychological studies indicate that these dimensions may be separable in the brain: patients with brain injury may be impaired in the processing of melody but

Chunking
The re-organization or re-grouping of movement sequences into smaller sub-sequences during performance. Chunking is thought to facilitate the smooth performance of complex movements and to improve motor memory.

Spectral energy
Energy contained in the frequency distribution of a given sound.

Retinotopic mapping
The organization or mapping of the visual cortex that reflects the spatial organization of visual information in the retina.

Cochleotopic mapping
The topographic organization or mapping of the auditory cortex to reflect the frequency-based representation in the cochlea.

Fundamental frequency
The frequency of a periodic sound corresponding to the lowest period or mode of vibration, and usually the primary contributor to the perception of pitch. To be distinguished from harmonic partials, which occur at integer multiples of the fundamental frequency.

Pitch constancy
The ability to perceive pitch identity across changes in acoustical properties, such as loudness, temporal envelope, or across different timbres (for example, voices or instruments).

Musical syntax
Rules governing the melodic, rhythmic and harmonic construction of music in a given musical culture.
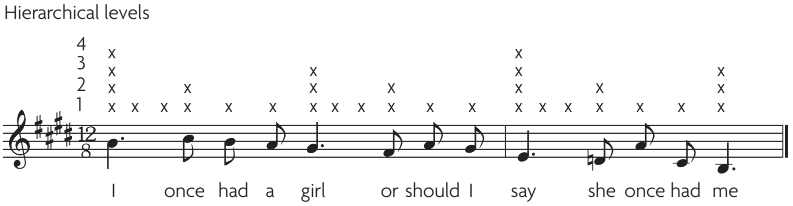
Figure 2 | **Hierarchical metrical structure in a familiar song.** Regular metrical structure is a common feature of music from many cultures. It consists of a hierarchical framework of perceived beats that is inferred from the acoustic stimulus, and unfolds over equal units of time. This structure is illustrated in the song 'Norwegian Wood'. Each column of Xs represents a beat; each row of Xs corresponds to different hierarchical levels of temporal regularity, from the lowest level, which relates to local regularities, to higher levels, which occur in integer multiples of the lower levels, and correspond to more global temporal regularities. When listening to a piece of music, most people, regardless of formal musical training, can extract this periodic higher order organization of events that allows one to create temporal expectancies, and thus tap to the beat of the tune. Several theoretical models exist of how this metrical structure is extracted from ongoing sound[72]. Figure modified, with permission, from REF. 86 © (2006) Elsevier Science.

not rhythm, or vice versa[63]. Studies of auditory rhythm discrimination and reproduction in patients with brain injury have linked these functions to the auditory regions of the temporal lobe, but have shown no consistent localization or lateralization[64–66]. Neuroimaging studies of rhythm discrimination and reproduction similarly demonstrate the involvement of auditory cortical regions, but are again inconsistent in terms of localization[23,6,24]. Neuropsychological and neuroimaging studies have shown that the motor regions of the brain contribute to both perception and production of rhythms[34]. Even in studies where subjects only listen to rhythms, the basal ganglia, cerebellum, dPMC and SMA are often implicated[67–69]. The concept that is emerging from this literature is that the analysis of rhythm may depend to a large extent on interactions between the auditory and motor systems.

Music performance: auditory–motor interactions

Feedforward and feedback interactions. There has been a great deal of recent interest in understanding the interactions between the auditory and motor systems. Unlike visual stimuli, music has a remarkable ability to drive rhythmic, metrically organized motor behaviour[70,71]. It is natural to tap one's foot to a musical beat, but not to a rhythmic visual event, such as a bouncing ball, suggesting a priviliged link between auditory and motor systems in the time domain. An auditory–motor interaction may be loosely defined as any engagement of or communication between the two systems, and may be conceptualized into two categories: feedforward and feedback. In feedforward interactions, it is the auditory system that predominately influences the motor output, often in an predictive manner[72]. An example is the phenomenon of tapping to the beat, where the listener anticipates the rhythmic accents in a piece of music. Another example is the effect of music on movement disorders: rhythmic auditory stimuli have been shown to improve walking ability in Parkinson's disease and stroke patients[73,74].

Feedback interactions are particularly relevant in playing an instrument such as a violin, or in singing, where pitch is variable and must be continuously controlled. The performer must listen to each note produced and implement appropriately timed motor adjustments. If auditory feedback is blocked, musicians can still execute well-rehearsed pieces, but expressive aspects of performance are affected[75]. More importantly, when auditory feedback is experimentally manipulated by the introduction of delays or distortions[76], motor performance is significantly altered: asynchronous feedback disrupts the timing of events, whereas alteration of pitch information disrupts the selection of appropriate actions, but not their timing. These studies suggest that disruptions occur because both actions and percepts depend on a single underlying mental representation. We propose that the circuitry linking auditory systems to motor systems may be the neural substrate of this cognitive representation.

Models of auditory–motor interactions. Several models of auditory–motor interactions have been advanced. The model of Hickok and Poeppel[77], which is specific for speech processing, proposes that a ventral auditory stream maps sounds onto meaning, whereas a dorsal stream maps sounds onto articulatory-based representations. They and others[78] suggest that posterior auditory regions at the parieto-temporal boundary are crucial nodes in the auditory–motor interface, mapping auditory representations onto motor representations of speech, and also melodies[79]. Most recently, a general model for auditory–motor transformations was proposed in which the dorsal stream was characterized as the 'do-pathway'[43]. In this model, the planum temporale (PT), located in the posterior superior temporal plane, analyses incoming complex sounds. Acting as a computation hub[80], the PT disambiguates these various types of sound, and those that are of motor relevance are then transformed into a motor representation in the prefrontal, premotor and motor regions through the dorsal pathway.

At present, support for these models has come from studies of human speech, animal vocalizations and auditory spatial processing. Music is a source of rich auditory–motor interactions that differ from these other sorts of sensory–motor processes in several ways. The question is whether existing models can account for the types of auditory–motor interplay that are so crucial and unique for music performance. One important difference is that music is rhythmically structured in an often elaborate hierarchy based on meter. Music from all cultures is generally temporally organized such that each sounded event that unfolds over time belongs to a higher-order level of metric organization (FIG. 2). This structure creates musical expectations, and allows both listener and performer to make predictions about future events[72].

The ability to tap to the beat is unique to music (and probably to humans[81]), and is a natural behaviour even in people with no musical training[82–84]. The listener must extract the relevant temporal information from a complex auditory stimulus, and make predictions that enable

Tapping to the beat
The ability to tap along to an identifiable repeating pulse present in many styles of music. This periodic pulse usually coincides with the strong beat of a rhythm's meter.

Mental representation
A psychological construct describing information about an object, action or percept that is thought to be encoded in the brain.

Meter
The hierarchical and periodic organization of musical time, usually extending over multiple measures or phrases. Meter is derived from the alternating patterns of strong and weak beats or pulses.

the planning and execution of sequential movements in a precisely timed manner. Experimental evidence indicates that musical sequences are planned and executed in terms of a metrical structure[85]. Temporal precision is essential in musical performance, as one must be able to convey the metrical structure in order to create appropriate musical expectations. Similarly, error-correction mechanisms that rely on auditory feedback must also be implemented in real-time. By contrast, this type of high-level, predictive timing is not crucial in the same way for speech: apart from certain highly elaborated speech forms, such as poetry, there is no 'beat' to tap to[86].

Mirror/echo neurons and auditory–motor interactions. An important role has been given to the mirror neuron system in neural models of sensory–motor integration. Considerable evidence that this class of neuron (found in the ventral premotor cortex (vPMC) and Brodmann area 44) respond both to actions and to the observation of actions has been accumulated. This system has been proposed to form the neural basis for action understanding: visual representations of actions that we observe are mapped onto our own motor system[87].

Some mirror neurons are not only activated by the observation of goal-directed actions, but also by the associated sounds produced during the action, indicating that the auditory modality can access the motor system[88,89]. The presence of such 'echo neurons' has led to the proposal that this system may be a neural basis for the evolution of speech[90], forming the crucial link between sender and receiver[91]. This idea is compatible with the much older motor theory of speech perception[92], which was based on behavioural evidence that speech phonemes do not map in a one-to-one fashion with their acoustical properties, but rather are related to articulatory gestures. More recently, active listening to speech in discrimination tasks has been shown to recruit motor speech regions of the brain[93,94], particularly Brodmann area 44 and the adjacent vPMC; in turn, articulation of syllables produces activity in posterior auditory areas even when sound input is masked[95]. Excitability of the motor cortical face area in the left hemisphere is also increased while listening to speech[96]. Whereas these auditory–motor interactions have mainly been studied for speech processes, and have focused on Broca's area and the vPMC, more recent experiments have begun to shed light on how they are needed for musical performance, and results point to a broader involvement of the dPMC and other motor areas.

Music performance: neural correlates

Common patterns of brain activity for perception and production. Several authors have examined the hypothesis that neural regions mediating feedforward auditory–motor interactions must not only be engaged during perception, but also during the production of music (FIG. 3). Playing a musical instrument such as the piano requires precise mapping between a musical note (sound) and the finger used to execute that specific note on the keyboard (movement). Auditory–motor electroencephalography co-activity has been demonstrated in a task in which non-musicians were trained to play a simple melody on a keyboard when sound–movement mappings were congruent[97]. Importantly, this effect was not present when there was no consistent mapping during learning between the key strokes and the sound produced. Similarly, non-musicians trained to play a tune on a keyboard demonstrated significant responses in the vPMC, Broca's area and parietal areas only when they subsequently listened to the trained stimulus, and not to equally familiar but motorically untrained melodies[98] (FIG. 3). The activation level in this study was sensitive to the degree of mapping, such that melodies containing the same notes as the trained stimulus, but in a different order, produced intermediate levels of vPMC activation. The vPMC has also been observed to be active under less constrained circumstances, such as during melodic discrimination[99], and while listening to consonant musical excerpts[100], presumably due to subvocal rehearsal, which also occurs during musical imagery. These findings demonstrate that auditory–motor interactions can be elicited in non-musicians spontaneously, or more specifically when there is a direct learned mapping between movement and sound.

These studies demonstrated auditory–motor interactions in tasks in which there was an association between a particular movement and a particular sound, but they were not designed to indicate which features of the auditory input may be crucial to enable these interactions. Because temporal predictability may be an intrinsic feature of music that drives auditory–motor interactions, we tested the hypothesis that metrical saliency would increase the degree to which auditory input modulates motor behaviour[101] (FIG. 4b). As the beat became more salient, neural activity in posterior STG and dPMC — as well as the functional connectivity between these regions — increased, along with a behavioural change in key press duration. This finding demonstrates that the presence of metrical structure is sufficient to engage auditory–motor circuitry. However, it appears to be the more dorsal portions of the PMC that are important for this aspect of metrical processing.

Musical training. Although auditory–motor interactions can be observed in those without formal musical training, musicians are an excellent population to investigate this question because of their long-established and rich associations between auditory and motor systems. Indeed, musicians have been shown to have specific anatomical adaptations that correlate with their training (BOX 1).

Several neuroimaging studies have observed that musicians show lower levels of activity in motor regions than non-musicians during the performance of simple motor tasks, suggesting a more efficient pattern of neural recruitment[102–105]. However, when the task requirements are musically relevant, motor system engagement can be similar in musicians and non-musicians; conversely, frontal cortical areas can be more engaged in musicians, probably reflecting top-down strategies[25].

To specifically examine auditory–motor interactions, two recent fMRI studies[106,107] contrasted the brain activity stimulated in trained pianists when they listened to

Phonemes
Individual units of speech sound that combine to make words.

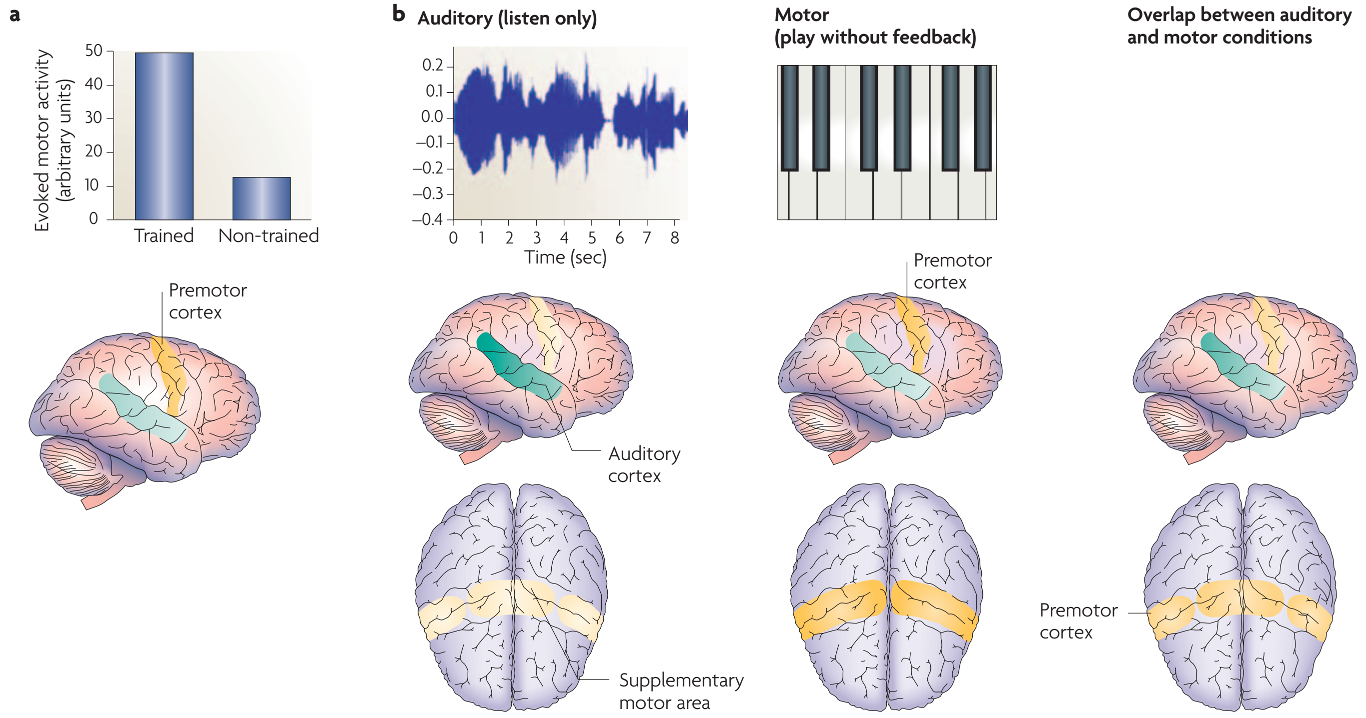

Figure 3 | **Coupling between auditory and premotor cortices in musical contexts.** Several neuroimaging studies demonstrate that activity in auditory and premotor cortices is tightly coupled under certain circumstances. **a** | In one study[98], people without musical training were taught to play a simple melody on a keyboard. After training, on hearing the learned piece, they exhibited not only the expected activity within the auditory cortex, but also activity within premotor areas. This effect was not present when listening to a melody that had not been trained (bar graph). **b** | Similarly, several studies[97,106–108] have compared the brain activity in musicians while they listened to a piece they knew how to play (left column) with their brain activity while they played the same piece but without auditory feedback (middle column). Significant overlap is observed both in auditory and premotor regions in each condition (right column), suggesting that auditory and motor systems interact closely during both perception and production.

familiar pieces of music with that stimulated when they played them. In both studies the pianists were scanned twice: first while listening to a familiar piece but making no movements, and second while playing either the same piece, or other familiar scales, without auditory feedback. Both studies demonstrated that the neural regions engaged during the listen and play conditions overlapped, and included the PMC, the SMA and the PT (FIG. 3). A similar effect was observed using magnetoencephalography (MEG), showing that activity in the vicinity of the primary motor cortex could be evoked in pianists when they listened passively to well-known melodies[108]. Conversely, activation of auditory areas has also been reported when pianists merely observe someone playing a piano keyboard[109]. A recent transcranial magnetic stimulation (TMS) study also showed increased motor excitability in the primary motor cortex of pianists when they listened to a piano piece that they had rehearsed, compared with a flute piece on which they were untrained[110]. Similarly, recent TMS data indicate that musicians show higher gain in motorcortical excitability than normal, and a higher sensitivity to TMS-induced synaptic plasticity[111]. These findings support the notion that the auditory and motor systems are tightly coupled in general, and more so in trained musicians than in untrained people.

Motor imagery. Previous neuroimaging studies have consistently reported activity in the SMA and premotor areas, as well as in auditory cortices when non-musicians imagine hearing musical excerpts[112]. Recruitment of the SMA and premotor areas is also reported when musicians are asked to imagine performing[105,113]. These findings suggest that there are both motor and auditory components to musical imagery. One may therefore ask to what extent motor imagery has a role in the co-activation of auditory and motor regions when there is a well-learned association between movement and sound. In the case of trained musicians, listening to a well-rehearsed piece is likely to elicit conscious attempts at motor imagery; executing finger movements may also result in volitional auditory imagery. Therefore, the findings of auditory cortex and vPMC or SMA co-activation in such studies may reflect such imagery processing. Conversely, imagery itself can be thought of as a consequence of the tight coupling between auditory cortices and the portions of the premotor and supplementary motor system.

However, motor imagery may not explain all examples of premotor recruitment during listening. Even when listeners do not have explicit sound–movement associations, such as when passively listening to rhythms in a naive condition without foreknowledge about any motor task, they still show recruitment of premotor

Magnetoencephalography
(MEG). A non-invasive technique that allows the detection of the changing magnetic fields that are associated with brain activity on the timescale of milliseconds.

Transcranial magnetic stimulation
(TMS). A technique that is used to induce a transient interruption of normal activity in a relatively restricted area of the brain. It is based on the generation of a strong magnetic field near the area of interest, which, if changed rapidly enough, will induce an electric field that is sufficient to stimulate neurons.

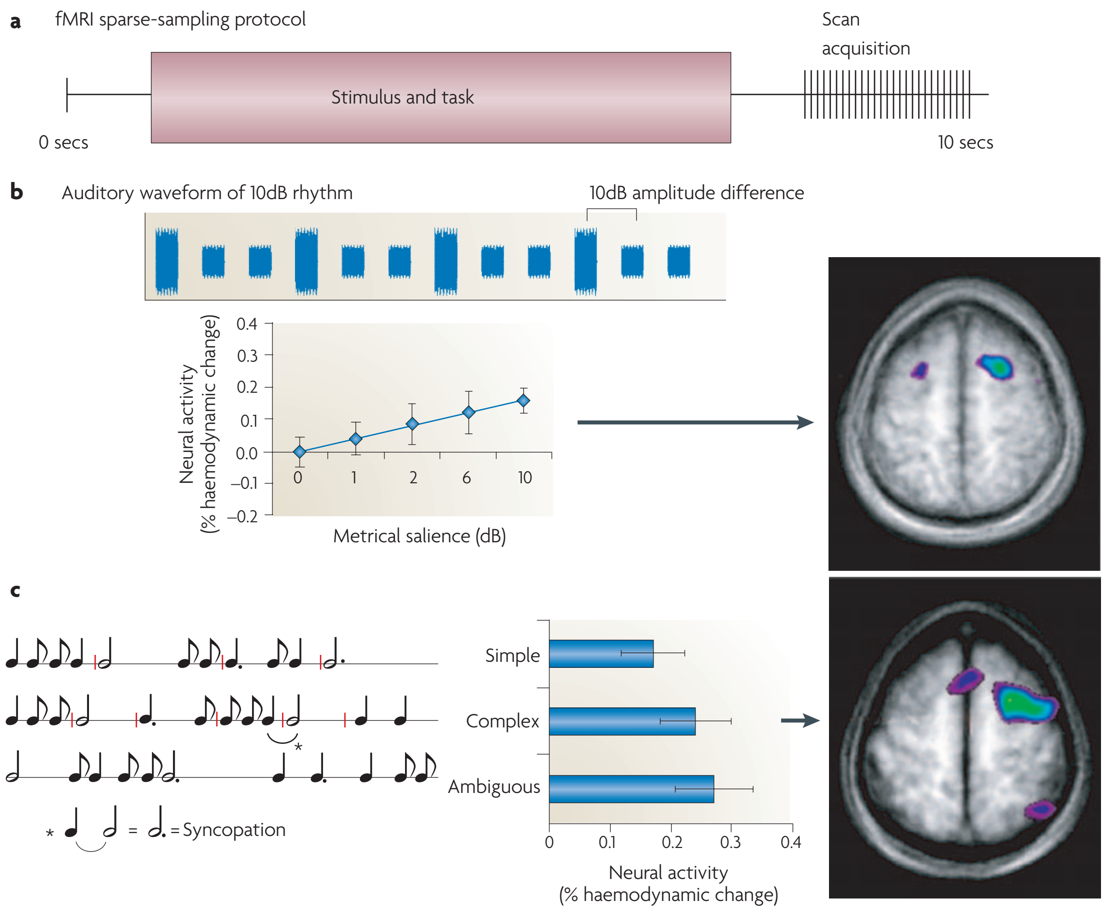

Figure 4 | **The role of the dorsal premotor cortex in metrical processing. a** | Paradigm used in studies that examine tapping to rhythms[25,101]. Using a sparse-sampling functional magnetic resonance imaging (fMRI) protocol, which avoids acoustical noise artefacts in the fMRI signal[175], the stimulus or task of interest was presented during a silent interval, followed by acquisition of the blood oxygenation signal, which lags by several seconds. This procedure avoids contamination of the signal by the rhythmic acoustical noise of the scanner. **b** | Metrical salience was manipulated parametrically by varying the intensity of every third element of an isochronous sequence that subjects were asked to tap along with[101]. As metrical salience increased, resulting in a perceivable triple meter (that is, waltz time), activation increased linearly within the dorsal premotor cortex (dPMC). **c** | Metrical complexity was manipulated by permuting the elements of a rhythmic sequence such that they were easily grouped into a (triple) meter (first example), or became increasingly more ambiguous in their metrical structure (second and third examples)[25]. Haemodynamic increases were again seen within the dPMC. These findings support a role for the dPMC in the processing of higher-order metrical structure. Part **b** is modified, with permission, from REF. 101 © (2006) Academic Press. Part **c** is modified, with permission, from REF. 25 © (2007) MIT Press.

cortices and the SMA[68]. These findings suggest that SMA and premotor regions may track rhythms spontaneously; thus, although imagery may well have a role in auditory–motor interactions, it does not appear to be essential for such interactions to emerge.

Functional architecture: a hypothesis

The SMA and cerebellum. In what follows, we will argue that the PMC is involved in direct and indirect auditory–motor interactions. However, it is clear that the PMC is only one link in a complex network: neurons in the pre-SMA and SMA are probably involved in movement sequencing. SMA neurons show selective activity for specific sequences of actions and code for the intervals between actions in a sequence, whereas pre-SMA neurons code for their rank–order and are thus likely to be involved in sequence chunking[114,115]. These functional attributes are crucial for higher order aspects of motor organization relevant to music; however, because the SMA appears not to receive direct projections from auditory areas (BOX 2), it presumably integrates auditory information through more indirect multisynaptic routes.

Studies have also implicated the cerebellum in rhythm synchronization[20,116–119], and suggested that it has a crucial role in temporal processing[2]. Motor timing could depend on several proposed cerebellar functions, such as feedforward and error-correction computations[5,13,120], as well as sensory–motor integration[17,121]. Based on these models, accurate timing would be based on a feedforward prediction of the timing of an up-coming movement, and the use of sensory feedback information to modify and correct subsequent movements.

Diffusion tensor imaging (DTI). A method that can provide quantitative information with which to visualize and study connectivity and continuity of neural pathways in the central and peripheral nervous systems *in vivo*.

PMC and sensory–motor transformations. The PMC is involved in various sensory–motor processes: it has reciprocal connections to various posterior association areas, with direct projections to the motor cortex that enable sensory-cued actions to be realized (BOX 2). There are several proposals about the function of the PMC[35,122–125]. Here, we integrate these various ideas into a general framework to show how the PMC is functionally organized such that it can compute a variety of sensory–motor transformations that are relevant for music. In particular, we argue for a distinction between direct and indirect auditory–motor interactions.

The PMC may be divided into dorsal (dPMC) and ventral (vPMC) sectors that are approximately demarcated at the junction of the superior frontal sulcus with the superior precentral sulcus[124]. It has been proposed that the vPMC and dPMC are involved in direct and indirect visuomotor transformations, respectively[126]. Direct transformations involve a one-to-one matching of sensory features with motor acts. In the classic reach and grasp example, neurons in the vPMC represent sensory properties of the target: they match properties of the visual object with an appropriate motor gesture[126–129]. Direct auditory–motor transformations are highly relevant during music performance, and have been shown to engage the vPMC and Brodmann area 44 (REFS 98,106,107). Hence, it is the more ventral portions of this premotor system that are active on hearing music for which one has an associated motor programme.

Box 1 | Changes in brain structure related to musical performance

Neuroimaging techniques have revealed structural changes in the human brain that coincide with, and probably underlie, specialized cognitive abilities. Several recent studies have shown that musical training is associated with features of brain anatomy in both auditory and motor regions of the brain. In the auditory domain, structural magnetic resonance imaging has shown a greater volume of auditory cortex in professional musicians as compared with non-musicians[149], which is correlated with pitch perception ability[150]. In the motor domain, it has been shown[149] that musicians have greater grey-matter concentration in motor cortices, consistent with earlier functional data[151] showing that expert string players had a larger cortical representation of the digits of the left hand. The latter effect was correlated with the age when musical training started, such that those who began earlier showed larger representations. A larger anterior corpus callosum has also been reported in musicians compared with non-musicians, again, in relation to early training[152]. These findings imply a sensitive period for motor performance, compatible with behavioural evidence[153]. Volume differences between musicians and non-musicians have also been reported in the cerebellar hemispheres[154], but only for men. The figure shows the results of a recent study using diffusion tensor imaging (DTI)[155], which showed evidence for greater white-matter coherence (as indicated by increased functional anisotropy in this region, see graph) in the internal capsule (coloured areas in the left hand panel) of professional musicians, and this feature was specifically related to the number of hours practiced in childhood. Taken together, these findings indicate that the brains of musicians differ structurally from those of non-musicians, and that these differences may be related to when musical training begins, and/or to the amount of training. An outstanding question is whether these structural differences are solely the result of musical training, or whether they may also be related to pre-existing differences in auditory or motor abilities that allow these individuals to excel once they receive musical training. Figure modified with permission from *Nature Neuroscience* REF. 155 © (2005) Macmillan Publishers Ltd.

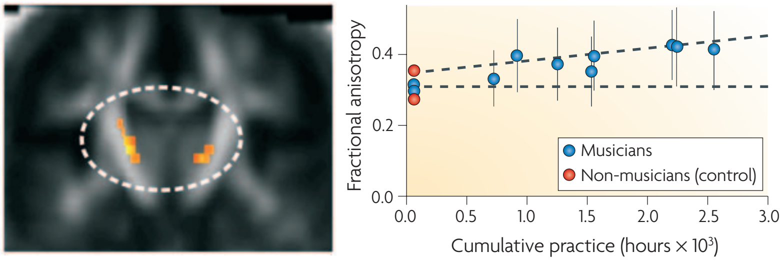

In contrast to the vPMC, the dPMC is thought to have a more indirect role in sensory–motor transformations: it represents motor information instructed by the sensory cues rather than their sensory properties[122,125,126,130,131]. In the reach and grasp example, dPMC neurons are involved in motor planning and in preparing and selecting movement parameters (direction and amplitude) in response to what the sensory cues signal. Thus, neurons in the dPMC retrieve and integrate sensory information with motor instructions in order to carry out an action plan[122,126]. The rostral dPMC is of particular interest because it participates in more abstract or higher order aspects of movement[123,126,132,133], such as the selection of movements that are conditionally linked by a sensory stimulus[134–137], including situations such as labelling a musical chord[138]. In these cases, the sensory signal does not directly indicate an action *per se*, but rather a conditional rule about what response to select among competing alternatives, a function which would be highly useful for musical execution, which depends on learned actions and a hierarchical organization. Inactivation of the dPMC, not the vPMC, impairs these conditional motor behaviours[139], and also the ability to coordinate and time movements[140], another crucial feature for musical performance.

The view that the dPMC is involved in higher order aspects of movement organization is supported by a series of experiments in which the abstract metrical structure of rhythms was manipulated. The data show that the dPMC is recruited as a function of increasing metrical saliency[101] (FIG. 4b), and also that it increases its activity as subjects reproduce progressively more complex rhythmic movements[25] (FIG. 4c). We propose that what modulates dPMC activity in these instances is not the direct mapping of sounds to movements, but the selection of movements based on information derived from the auditory cue. The dPMC is thus putatively involved in extracting higher-order features of the auditory stimulus, in this case meter, in order to implement temporally organized actions. In turn, this organization allows for predictability, which is essential for music perception.

Our view, therefore, is that both ventral and dorsal auditory–motor circuits are important in musical processing, but that they have distinct and complementary functions. Listening to music may entail activation of motor programmes associated with producing the music, enabled through vPMC links, but perhaps more interesting for models of music cognition, it also engages a neural system — in which the dPMC is a crucial node — that extracts higher-order metrical information. This latter mechanism may therefore be crucial in setting up temporal (and thus melodic) expectancies that are at the heart of musical understanding[141].

Box 2 | **Anatomical connectivity**

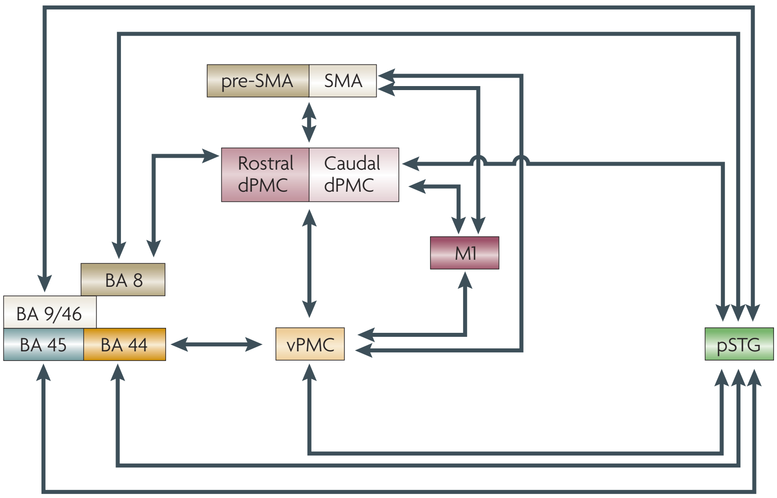

Understanding how auditory cortices are anatomically interconnected with the motor cortical system is crucial for understanding their functional interactions. The anatomical connections shown in the figure are based mainly on data from non-human primates. Direct connections have been demonstrated from the auditory regions in the posterior superior temporal gyrus (pSTG) to frontal regions including the dorsal and ventral premotor cortex (dPMC and vPMC, respectively) and Brodmann areas (BA) 8 and 9/46 (REFS 156–158) (via the arcuate fasciculus and superior longitudinal fasciculus)[159]. There are also projections from these posterior auditory areas to regions rostral and dorsal to the inferior limb of the arcuate sulcus, corresponding to BA 44 and BA 45 (REFS 160–162). Both the dPMC and vPMC are highly interconnected[163], with additional dense connections with the primary motor cortex (M1) and the supplementary motor area (SMA)[144]. The vPMC in particular receives greater influence from prefrontal regions such as the dorsolateral prefrontal cortex (DLPFC), than rostral sectors of the dPMC[144,164,165], and it also shares connections with neighbouring BA 44 (REFS 158,161). By contrast, the pre-SMA and SMA do not directly connect with the posterior STG[157,166]. Other regions, such as the insula[167] and BA 8 (REFS 158,168) connect with the posterior STG and could thus also influence the premotor regions.

Premotor cortex: alternative interpretations. Although the notion of direct sensory–motor transformations is a parsimonious proposal for vPMC function that fits with the mirror/echo neuron concept, it remains to be ascertained whether the role of the dPMC in indirect sensory–motor transformations is also related to this action–perception matching system. Mirror neurons pertaining to hand and mouth actions have traditionally been studied based on their functional significance in the monkey, but the case has been made that action observation engages the entire PMC in a somatotopic manner, with observation of leg actions preferentially recruiting the dPMC[142]. However, the notion of a somatotopic motor cortical organization has been challenged[143], as there are hand and digit representations in both the vPMC and dPMC[144], and a plethora of functional neuroimaging studies that use tasks involving hand and finger effectors also demonstrate neural activity in the dPMC.

Another view of PMC function attributes its role to sequencing behaviours[34]. Others have specifically suggested that the vPMC, along with Brodmann areas 44 and 45, is involved in serial sequence prediction, regardless of whether the patterns are purely perceptual or action related[35,145]. This notion of sequencing can perhaps be

Box 3 | **Music, motion and emotion**

One of the remarkable aspects of music is that it evokes emotion. A performer will often experience emotion while playing, which in turn can be communicated to an audience. A listener will also experience emotions perceived to be inherent to the music and/or derived from the performer's execution (for a review see REF. 169). Music can elicit not only psychological mood changes, but also physiological changes, for example in heart rate and respiration[170]. Music-induced emotion has been shown to recruit the reward–motivational circuit, including the basal forebrain, midbrain and orbitofrontal regions, as well as the amygdala[171]. The mechanisms whereby such emotional transfer may occur are far from understood, but they may involve the sensory–motor interactions that are the theme of this paper.

The role of a mirror-neuron system in perception of emotion, empathy and social cognition in general have been discussed by several authors (for a review see REF. 172). If music taps into a similar system, it stands to reason that modelling or mimicking emotions expressed by music may be one way (among many others) in which music may induce emotion, as has been explicitly proposed by some authors[86,173,174]. For example, the acoustical features of typically sad or subdued music (containing slow tempo, lower pitched sounds and smooth transitions between sounds) are compatible with the physical expression of sadness, which involves slow, low-intensity movements. The reverse applies to music typically associated with happiness or excitement, which tends to be loud, fast and high-pitched, and is hence associated with rapid, high-energy movements, such as can be observed in spontaneous dancing to music. Auditory–motor interactions, as described elsewhere in this Review, may therefore in part mediate music-induced emotion, perhaps providing the link between listening and moving. The psychophysiological changes that are associated with listening to music might also be a byproduct of the engagement of the motor system, and therefore would also provide afferent feedback enhancing the affective state.

explained by the proposal that regions along the inferior frontal gyrus (Brodmann areas 44, 45 and 47/12) and vPMC are hierarchically involved in the organization of behaviour governing action selection and other executive processes such as active retrieval[133,146–148]. For example, Brodmann areas 44 and 45 may be involved in higher-order control of action plans such as the selection and/or inhibition of action chunks, whereas caudal regions such as the vPMC mediate simpler selections of movements such as those based on sensory–motor associations. Similarly, the mechanism that supports imitation in the mirror neuron system may also be based on the retrieval and subsequent selection (or sequencing) of individual motor acts[87]. Although it is undisputed that the PMC engages in sensory–motor integration, we still do not fully understand its general principle of organization, or whether or not there is a general type of computation that this region performs that could explain the various roles that have been attributed to it. Playing and listening to music could hold the key to understanding the nature of this functional organization.

Conclusions and future perspectives

Playing and listening to music are remarkably complex, culturally conditioned, and yet natural human abilities. The study of these processes promises to uncover fundamental properties of human neural function. Indeed, it must be because humans possess the neural hardware to carry out the necessary operations that music exists at all. This Review merely sketches possibilities for how music production and perception are instantiated in the brain; however, several testable hypotheses have emerged. We have proposed that interactions between posterior auditory cortices and premotor cortices mediate the cognitive representations that are responsible for integrating feedforward and feedback information during performance and perception. Specifically, we suggest that higher-order temporal organization (metricality) emerges from the temporal predictions that are enabled by this system. Because of its connectivity to both input and output systems, and its physiological properties, the dPMC may be a crucial neural hub involved in integrating higher order features of a sound with the appropriately timed and organized motor response.

Among many outstanding questions, we can list some of the most important. We have emphasized the probable role of the dorsal auditory pathway in action–perception integration, but we do not know how information coded in the ventral auditory pathways is integrated. We also do not know how kinesthetic and propioceptive cues are integrated with the motor and auditory systems. More research should be done in which feedback information is manipulated to test its influence on the putative networks under discussion. We have no clear idea of the specific roles of afferent and efferent connections between auditory and motor systems. Although we review evidence that auditory–motor interactions are greater in people with musical training, we do not know how this comes about, nor do we have any evidence about its specific anatomical substrate. A related question is how these interactions emerge in development, because music performance is sensitive to the age at which training begins. With respect to the premotor system, we have yet to understand how its computations interface with those provided by the SMA, cerebellum and prefrontal cortex, to form a planning and execution network that is undoubtedly crucial for musical performance. The possibility that auditory–motor interactions are related to emotion (BOX 3) is intriguing, but the neural pathways involved are entirely unknown. These and many additional questions provide a rich source of research possibilities — our hope is that this Review will motivate investigations in this domain, which we believe has considerable promise for understanding broader questions of human abilities and behaviours.

1. Buhusi, C. V. & Meck, W. H. What makes us tick? Functional and neural mechanisms of interval timing. *Nature Rev. Neurosci.* **6**, 755–765 (2005).
2. Ivry, R. B. & Spencer, R. M. The neural representation of time. *Curr. Opin. Neurobiol.* **14**, 225–232 (2004).
This review integrates data from patient and neuroimaging studies of motor and perceptual timing, and presents a model for the contributions of the cerebellum and basal ganglia to timing functions.
3. Spencer, R. M., Zelaznik, H. N., Diedrichson, J. & Ivry, R. B. Disrupted timing of discontinuous but not continuous movements by cerebellar lesions. *Science* **300**, 1437–1439 (2003).
4. Wing, A. M. Voluntary timing and brain function: an information processing approach. *Brain Cogn* **48**, 7–30 (2002).
5. Mauk, M. D. & Buonomano, D. V. The neural basis of temporal processing. *Annu. Rev. Neurosci.* **27**, 307–340 (2004).
6. Penhune, V. B., Zatorre, R. J. & Evans, A. C. Cerebellar contributions to motor timing: a PET study of auditory and visual rhythm reproduction. *J. Cogn. Neurosci.* **10**, 752–765 (1998).
7. Lewis, P. A. & Miall, R. C. Distinct systems for automatic and cognitively controlled time measurement: evidence from neuroimaging. *Curr. Opin. Neurobiol.* **13**, 250–255 (2003).
8. Ivry, R. B., Spencer, R. M., Zelaznik, H. N. & Diedrichsen, J. The cerebellum and event timing. *Ann. N. Y. Acad. Sci.* **978**, 302–317 (2003).
9. Ramnani, N. & Passingham, R. E. Changes in the human brain during rhythm learning. *J. Cogn. Neurosci.* **13**, 952–966 (2001).
10. Sakai, K., Ramnani, N. & Passingham, R. E. Learning of sequences of finger movements and timing: frontal lobe and action-oriented respresentation. *J. Neurophysiol.* **88**, 2035–2046 (2002).
11. Harrington, D. L., Lee, R. R., Boyd, L. A., Rapcsak, S. Z. & Knight, R. T. Does the representation of time depend on the cerebellum? Effect of cerebellar stroke. *Brain* **127**, 561–574 (2004).
12. Bastien, A. J. Learning to predict the future: the cerebellum adapts feedforward movement control. *Curr. Opin. Neurobiol.* **16**, 645–649 (2006).
13. Ohyama, T., Nores, W. L., Murphy, M. & Mauk, M. D. What the cerebellum computes. *Trends Neurosci.* **26**, 222–227 (2003).
14. Shimansky, Y., Wang, J. J., Bauer, R. A., Bracha, V. & Bloedel, J. R. On-line compensation for perturbations of a reaching movement is cerebellar dependent: support for the task dependency hypothesis. *Exp. Brain Res.* **155**, 156–172 (2004).
15. Balasubramanian, R., Wing, A. M. & Daffertshofer, A. Keeping with the beat: movement trajectories contribute to movement timing. *Exp. Brain Res.* **159**, 129–134 (2004).
16. Loehr, J. D. & Palmer, C. Cognitive and biomechanical influences in pianists' finger tapping. *Exp. Brain Res.* **178**, 518–528 (2006).
17. Bower, J. M. The cerebellum as a sensory acquisition controller. *Hum. Brain Mapp.* **2**, 255–256 (1995).
18. Petacchi, A., Laird, A. R., Fox, P. T. & Bower, J. M. Cerebellum and auditory function: an ALE meta-analysis of functional neuroimaging studies. *Hum. Brain Mapp.* **25**, 118–128 (2005).
19. Harrington, D. L. & Haaland, K. Y. Neural underpinnings of temporal processing: a review of focal lesion, pharmacological, and functional imaging research. *Rev. Neurosci.* **10**, 91–116 (1999).
20. Rao, S. M. *et al.* Distributed neural systems underlying the timing of movements. *J. Neurosci.* **17**, 5528–5535 (1997).
21. Rao, S. M., Mayer, A. R. & Harrington, D. L. The evolution of brain activation during temporal processing. *Nature Neurosci.* **4**, 317–323 (2001).
22. Pope, P., Wing, A. M., Praamstra, P. & Miall, R. C. Force related activations in rhythmic sequence production. *NeuroImage* **27**, 909–918 (2005).
23. Bengtsson, S. L., Ehrsson, H. H., Forssberg, H. & Ullén, F. Dissociating brain regions controlling the temporal and ordinal structure of learned movement sequences. *Eur. J. Neurosci.* **19**, 2591–2602 (2004).
24. Lewis, P. A., Wing, A. M., Pope, P. A., Praamstra, P. & Miall, R. C. Brain activity correlates differentially with increasing temporal complexity of rhythms during initialisation, and continuation phases of paced finger tapping. *Neuropsychologia* **42**, 1301–1312 (2004).
25. Chen, J. L., Penhune, V. B. & Zatorre, R. J. Moving in time: brain networks for auditory-motor synchronization are modulated by rhythm complexity and musical training. *J. Cogn. Neurosci.* (in the press).
26. Graybiel, A. M. The basal ganglia: learning new tricks and loving it. *Curr. Opin. Neurobiol.* **15**, 638–644 (2005).

27. Doyon, J., Penhune, V. B. & Ungerleider, L. G. Distinct contribution of the cortico-striatal and cortico-cerebellar systems to motor skill learning. *Neuropsychologia* **41**, 252–262 (2003).
28. Penhune, V. B. & Doyon, J. Cerebellum and M1 interaction during early learning of timed motor sequences. *NeuroImage* **26**, 801–812 (2005).
29. Hikosaka, O., Nakamura, H., Sakai, K. & Nakahara, H. Central mechanisms of motor skill learning. *Curr. Opin. Neurobiol.* **12**, 217–222 (2002).
30. Thach, W. T. A role for the cerebellum in learning movement coordination. *Neurobiol. Learn. Mem.* **70**, 177–188 (1998).
31. Garraux, G. *et al.* Shared brain areas but not functional connections in controlling movement timing and order. *J. Neurosci.* **25**, 5290–5297 (2005).
32. Sakai, K., Hikosaka, O. & Nakamura, H. Emergence of rhythm during motor learning. *Trends Cogn. Sci.* **8**, 547–553 (2004).
This review nicely ties together the behavioural and neuroimaging data on motor sequence chunking, and posits the role of the preSMA and cerebellum during rhythm and motor skill acquisition.
33. Kennerley, S. W., Sakai, K. & Rushworth, M. F. Organization of action sequences and the role of the pre-SMA. *J. Neurophysiol.* **91**, 978–993 (2004).
34. Janata, P. & Grafton, S. T. Swinging in the brain: shared neural substrates for behaviors related to sequencing and music. *Nature Neurosci.* **6**, 682–687 (2003).
35. Schubotz, R. I. & von Cramon, D. Y. Functional-anatomical concepts of human premotor cortex: evidence from fMRI and PET studies. *NeuroImage* **20**, Suppl. 1, S120–S131 (2003).
36. Johnson, P. B., Ferraina, S., Bianchi, L. & Caminiti, R. Cortical networks for visual reaching: physiological and anatomical organization of frontal and parietal lobe arm regions. *Cereb. Cortex* **6**, 102–119 (1996).
37. Rizzolatti, G., Luppino, G. & Matelli, M. The organization of the cortical motor system: new concepts. *Electroencephalogr. Clin. Neurophysiol.* **106**, 283–296 (1998).
38. Parsons, M. W., Harrington, D. L. & Rao, S. M. Distinct neural systems underlie learning of visuomotor and spatial representations of motor skills. *Hum. Brain Mapp.* **24**, 229–247 (2005).
39. Chen, J., Woollacott, M. & Pologe, S. Accuracy and underlying mechanisms of shifting movements in cellists. *Exp. Brain Res.* **174**, 467–476 (2006).
40. Rauschecker, J. P. & Tian, B. Mechanisms and streams for processing of 'what' and 'where' in auditory cortex. *Proc. Natl Acad. Sci. USA* **97**, 11800–11806 (2000).
41. Kaas, J. H., Hackett, T. A. & Tramo, M. J. Auditory processing in primate cerebral cortex. *Curr. Opin. Neurbiol.* **9**, 164–170. (1999).
42. Binder, J. R. *et al.* Human temporal lobe activation by speech and nonspeech sounds. *Cereb. Cortex* **10**, 512–528. (2000).
43. Warren, J. E., Wise, R. J. & Warren, J. D. Sounds do-able: auditory-motor transformations and the posterior temporal plane. *Trends Neurosci.* **28**, 636–643 (2005).
An important review paper that incorporates speech and non-speech literature to propose that the dorsal auditory pathway is involved in general transformations of acoustic information into motor representations.
44. Milner, A. D. & Goodale, M. A. *The Visual Brain in Action* (Oxford University Press, New York, 1995).
45. Belin, P. & Zatorre, R. J. 'What', 'where', and 'how' in auditory cortex. *Nature Neurosci.* **3**, 965–966 (2000).
46. Warren, J. D., Jennings, A. R. & Griffiths, T. D. Analysis of the spectral envelope of sounds by the human brain. *NeuroImage* **24**, 1052–1057 (2005).
47. Zatorre, R. J., Bouffard, M. & Belin, P. Sensitivity to auditory object features in human temporal neocortex. *J. Neurosci.* **24**, 3637–3642 (2004).
48. Zatorre, R. J. & Belin, P. in *Plasticity of the Central Auditory System and Processing of Complex Acoustic Signals* (eds Syka, J. & Merzenich, M.) 241–254 (Plenum, London, 2005).
49. Bendor, D. & Wang, X. The neuronal representation of pitch in primate auditory cortex. *Nature* **436**, 1161–1165 (2005).
50. Zatorre, R. J. Pitch perception of complex tones and human temporal-lobe function. *J. Acoust. Soc. Am.* **84**, 566–572 (1988).
51. Johnsrude, I. S., Penhune, V. B. & Zatorre, R. J. Functional specificity in the right human auditory cortex for perceiving pitch direction. *Brain* **123**, 155–163 (2000).
52. Penagos, H., Melcher, J. R. & Oxenham, A. J. A neural representation of pitch salience in nonprimary human auditory cortex revealed with functional magnetic resonance imaging. *J. Neurosci.* **24**, 6810–6815 (2004).
53. Patterson, R. D., Uppenkamp, S., Johnsrude, I. S. & Griffiths, T. D. The processing of temporal pitch and melody information in auditory cortex. *Neuron* **36**, 767–776 (2002).
54. Zatorre, R. J., Belin, P. & Penhune, V. B. Structure and function of auditory cortex: music and speech. *Trends Cogn. Sci.* **6**, 37–46 (2002).
55. Boemio, A., Fromm, S., Braun, A. & Poeppel, D. Hierarchical and asymmetric temporal sensitivity in human auditory cortices. *Nature Neurosci.* **8**, 389–395 (2005).
56. Schönwiesner, M., Rubsamen, R. & von Cramon, D. Y. Hemispheric asymmetry for spectral and temporal processing in the human antero-lateral auditory belt cortex. *Eur. J. Neurosci.* **22**, 1521–1528 (2005).
57. Scott, S. K. & Wise, R. J. The functional neuroanatomy of prelexical processing in speech perception. *Cognition* **92**, 13–45 (2004).
58. Zatorre, R. J. & Gandour, J. T. Neural specializations for speech and pitch: moving beyond the dichotomies. *Philos. Trans. R. Soc. Lond. B Biol. Sci.* (in the press).
59. Serrien, D. J., Ivry, R. B. & Swinnen, S. P. Dynamics of hemispheric specialization and integration in the context of motor control. *Nature Rev. Neurosci.* **7**, 160–166 (2006).
60. Koelsch, S. Neural substrates of processing syntax and semantics in music. *Curr. Opin. Neurobiol.* **15**, 207–212 (2005).
61. Krumhansl, C. L. Rhythm and pitch in music cognition. *Psychol. Bull.* **126**, 159–179 (2000).
62. Jones, M. R., Moynihan, H., MacKenzie, N. & Puente, J. Temporal aspects of stimulus-driven attending in dynamic arrays. *Psychol. Sci.* **13**, 313–319 (2002).
63. Peretz, I. & Coltheart, M. Modularity of music processing. *Nature Neurosci.* **6**, 688–691 (2003).
64. Peretz, I. Processing of local & global musical information by unilateral brain-damaged patients. *Brain* **113**, 1185–1205 (1990).
65. Penhune, V. B., Zatorre, R. J. & Feindel, W. H. The role of auditory cortex in retention of rhythmic patterns in patients with temporal-lobe removals including Heschl's gyrus. *Neuropsychologia* **37**, 315–331 (1999).
66. Kester, D. B. *et al.* Acute effect of anterior temporal lobectomy on musical processing. *Neuropsychologia* **29**, 703–708 (1991).
67. Grahn, J. A. & Brett, M. Rhythm and beat perception in motor areas of the brain. *J. Cogn. Neurosci.* **19**, 893–906 (2007).
68. Chen, J. L., Penhune, V. B. & Zatorre, R. J. in *Society for Neuroscience* Abst. 747.15 (Atlanta GA, 2006).
69. Sakai, K. *et al.* Neural representation of a rhythm depends on its interval ratio. *J. Neurosci.* **19**, 10074–10081 (1999).
70. Patel, A. D., Iversen, J. R., Chen, Y. & Repp, B. H. The influence of metricality and modality on synchronization with a beat. *Exp. Brain Res.* **163**, 226–238 (2005).
71. Repp, B. H. & Penel, A. Rhythmic movement is attracted more strongly to auditory than to visual rhythms. *Psychol. Res.* **68**, 252–270 (2004).
72. Large, E. W. & Palmer, C. Perceiving temporal regularity in music. *Cogn. Sci.* **26**, 1–37 (2002).
This paper synthesizes the authors' empirical studies to develop both a theoretical framework and a mathematical model for the way listeners perceive temporal regularity in musical performance.
73. Thaut, M. H., McIntosh, G. C. & Rice, R. R. Rhythmic facilitation of gait training in hemiparetic stroke rehabilitation. *J. Neurol. Sci.* **151**, 207–212 (1997).
74. McIntosh, G. C., Brown, S. H., Rice, R. R. & Thaut, M. H. Rhythmic auditory-motor facilitation of gait patterns in patients with Parkinson's disease. *J. Neurol. Neurosurg. Psychiatr.* **62**, 22–26 (1997).
75. Repp, B. H. Effects of auditory feedback deprivation on expressive piano performance. *Music Perception* **16**, 409–438 (1999).
76. Pfordresher, P. Q. & Palmer, C. Effects of hearing the past, present, or future during music performance. *Percept. Psychophys.* **68**, 362–376 (2006).
77. Hickok, G. & Poeppel, D. Dorsal and ventral streams: a framework for understanding aspects of the functional anatomy of language. *Cognition* **92**, 67–99 (2004).
An important proposal for a dual-stream model of speech processing with emphasis on an area at the parietal–temporal junction important for sensory–motor transformations.
78. Scott, S. K. & Johnsrude, I. S. The neuroanatomical and functional organization of speech perception. *Trends Neurosci.* **26**, 100–107 (2003).
79. Hickok, G., Buchsbaum, B., Humphries, C. & Muftuler, T. Auditory–motor interaction revealed by fMRI: speech, music, and working memory in area SPT. *J. Cogn. Neurosci.* **15**, 673–682 (2003).
80. Griffiths, T. D. & Warren, J. D. The planum temporale as a computational hub. *Trends Neurosci.* **25**, 348–353 (2002).
A review paper that proposes a model of how the planum temporale is involved in the analysis of complex sounds, including language and music.
81. Patel, A. D. Musical rhythm, linguistic rhythm, and human evolution. *Music Perception* **24**, 99–104 (2006).
82. Drake, C., Penel, A. & Bigand, E. Tapping in time with mechanically and expressively performed music. *Music Perception* **18**, 1–23 (2000).
83. Large, E. W., Fink, P. & Kelso, J. A. Tracking simple and complex sequences. *Psychol. Res.* **66**, 3–17 (2002).
84. Snyder, J. S. & Krumhansl, C. L. Tapping to ragtime: cues to pulse finding. *Music Perception* **18**, 455–489 (2001).
85. Palmer, C. & Pfordresher, P. Q. Incremental planning in sequence production. *Psychol. Rev.* **110**, 683–712 (2003).
86. Jackendoff, R. & Lerdahl, F. The capacity for music: what is it and what's special about it? *Cognition* **100**, 33–72 (2006).
87. Rizzolatti, G., Fogassi, L. & Gallese, V. Neurophysiological mechanisms underlying the understanding and imitation of action. *Nature Rev. Neurosci.* **2**, 661–670 (2001).
88. Kohler, E. *et al.* Hearing sounds, understanding actions: action representation in mirror neurons. *Science* **297**, 846–848 (2002).
89. Keysers, C. *et al.* Audiovisual mirror neurons and action recognition. *Exp. Brain Res.* **153**, 628–636 (2003).
90. Rizzolatti, G. & Arbib, M. A. Language within our grasp. *Trends Neurosci.* **21**, 188–194 (1998).
91. Rizzolatti, G. & Buccino, G. in *From monkey Brain to Human Brain* (eds Dehaene, S., Duhamel, J. R., Hauser, M. D. & Rizzolatti, G.) 213–233 (MIT Press, Cambridge, Massachusetts, 2005).
92. Liberman, A. M. & Mattingly, I. G. The motor theory of speech perception revised. *Cognition* **21**, 1–36 (1985).
93. Burton, M. W., Small, S. L. & Blumstein, S. E. The role of segmentation in phonological processing: an fMRI investigation. *J. Cogn. Neurosci.* **12**, 679–690 (2000).
94. Zatorre, R. J., Evans, A. C., Meyer, E. & Gjedde, A. Lateralization of phonetic and pitch processing in speech perception. *Science* **256**, 846–849 (1992).
95. Paus, T., Perry, D. W., Zatorre, R. J., Worsley, K. J. & Evans, A. C. Modulation of cerebral blood flow in the human auditory cortex during speech: role of motor-to-sensory discharges. *Eur. J. Neurosci.* **8**, 2236–2246 (1996).
96. Watkins, K. E., Strafella, A. P. & Paus, T. Seeing and hearing speech excites the motor system involved in speech production. *Neuropsychologia* **41**, 989–994 (2003).
97. Bangert, M. & Altenmuller, E. O. Mapping perception to action in piano practice: a longitudinal DC-EEG study. *BMC Neurosci.* **4**, 26 (2003).
98. Lahav, A., Saltzman, E. & Schlaug, G. Action representation of sound: audiomotor recognition network while listening to newly acquired actions. *J. Neurosci.* **27**, 308–314 (2007).
fMRI study in which non-musicians were trained to play simple melodies. The specificity of a premotor cortical network involved in mapping sounds to actions is demonstrated.
99. Brown, S. & Martinez, M. J. Activation of premotor vocal areas during musical discrimination. *Brain Cogn.* **63**, 59–69 (2007).
100. Koelsch, S., Fritz, T., von Cramon, D. Y., Müller, K. & Friederici, A. D. Investigating emotion with music: an fMRI study. *Hum. Brain Mapp.* **27**, 239–250 (2006).
101. Chen, J. L., Zatorre, R. J. & Penhune, V. B. Interactions between auditory and dorsal premotor cortex during synchronization to musical rhythms. *NeuroImage* **32**, 1771–1781 (2006).
An fMRI study demonstrating the specific role of the dorsal premotor cortex in interfacing auditory information during rhythm synchronization.
102. Hund-Georgiadis, M. & von Cramon, D. Y. Motor-learning-related changes in piano players and non-musicians revealed by functional magnetic-resonance signals. *Exp. Brain Res.* **125**, 417–425 (1999).
103. Jancke, L., Shah, N. J. & Peters, M. Cortical activations in primary and secondary motor areas for complex bimanual movements in professional pianists. *Brain Res. Cogn. Brain Res.* **10**, 177–183 (2000).

104. Koeneke, S., Lutz, K., Wustenberg, T. & Jäncke, L. Long-term training affects cerebellar processing in skilled keyboard players. *Neuroreport* **15**, 1279–1282 (2004).
105. Meister, I. G. *et al.* Playing piano in the mind—an fMRI study on music imagery and performance in pianists. *Brain Res. Cogn. Brain Res.* **19**, 219–228 (2004).
106. Baumann, S., Koeneke, S., Meyer, M., Lutz, K. & Jancke, L. A network for sensory-motor integration: what happens in the auditory cortex during piano playing without acoustic feedback? *Ann. N. Y. Acad. Sci.* **1060**, 186–188 (2005).
107. Bangert, M. *et al.* Shared networks for auditory and motor processing in professional pianists: evidence from fMRI conjunction. *Neuroimage* **30**, 917–926 (2006).
108. Haueisen, J. & Knosche, T. R. Involuntary motor activity in pianists evoked by music perception. *J. Cogn. Neurosci.* **13**, 786–792 (2001).
109. Haslinger, B. *et al.* Transmodal sensorimotor networks during action observation in professional pianists. *J. Cogn. Neurosci.* **17**, 282–293 (2005).
110. D'Ausilio, A., Altenmuller, E., Olivetti Belardinelli, M. & Lotze, M. Cross-modal plasticity of the motor cortex while listening to a rehearsed musical piece. *Eur. J. Neurosci.* **24**, 955–958 (2006).
TMS study demonstrating differential changes in short- and long-term motor cortical excitability in musicians during music perception.
111. Rosenkranz, K., Williamon, A. & Rothwell, J. C. Motorcortical excitability and synaptic plasticity is enhanced in professional musicians. *J. Neurosci.* **27**, 5200–5206 (2007).
112. Zatorre, R. J. & Halpern, A. R. Mental concerts: musical imagery and auditory cortex. *Neuron* **47**, 9–12 (2005).
113. Langheim, F. J., Callicott, J. H., Mattay, V. S., Duyn, J. H. & Weinberger, D. R. Cortical systems associated with covert music rehearsal. *NeuroImage* **16**, 901–908 (2002).
114. Kennerley, S. W., Sakai, K. & Rushworth, M. F. Organization of action sequences and the role of the pre-SMA. *J. Neurophysiol.* **91**, 978–993 (2004).
115. Shima, K. & Tanji, J. Neuronal activity in the supplementary and presupplementary motor areas for temporal organization of multiple movements. *J. Neurophysiol.* **84**, 2148–2160 (2000).
116. Jäncke, L., Loose, R., Lutz, K., Specht, K. & Shah, N. J Cortical activations during paced finger-tapping applying visual and auditory pacing stimuli. *Brain Res. Cogn. Brain Res.* **10**, 51–66 (2000).
117. Mayville, J. M., Jantzen, K. J., Fuchs, A., Steinberg, F. L. & Kelso, J. A. Cortical and subcortical networks underlying syncopated and synchronized coordination revealed using fMRI. Functional magnetic resonance imaging. *Hum. Brain Mapp.* **17**, 214–229 (2002).
118. Penhune, V. B. & Doyon, J. Dynamic cortical and subcortical networks in learning and delayed recall of timed motor sequences. *J. Neurosci.* **22**, 1397–1406 (2002).
119. Thaut, M. H. Neural basis of rhythmic timing networks in the human brain. *Ann. N. Y. Acad. Sci.* **999**, 364–373 (2003).
120. Nezafat, R., Shadmehr, R. & Holcomb, H. H. Long-term adaptation to dynamics of reaching movements: a PET study. *Exp. Brain Res.* **140**, 66–76 (2001).
121. Bloedel, J. Functional heterogeneity with structural homogeneity: how does the cerebellum operate? *Behav. Brain Sci.* **15**, 666–678 (1992).
122. Hoshi, E. & Tanji, J. Functional specialization in dorsal and ventral premotor areas. *Prog. Brain Res.* **143**, 507–511 (2004).
123. Picard, N. & Strick, P. L. Imaging the premotor areas. *Curr. Opin. Neurobiol.* **11**, 663–672 (2001).
Review of the anatomical and functional organization of the medial and lateral premotor regions in humans and monkeys.
124. Rizzolatti, G. & Craighero, L. The mirror-neuron system. *Annu. Rev. Neurosci.* **27**, 169–192 (2004).
A review of the mirror neuron system and presentation of an idea for the evolution of echo mirror neurons.
125. Wise, S. P., di Pellegrino, G. & Boussaoud, D. The premotor cortex and nonstandard sensorimotor mapping. *Can. J. Physiol. Pharmacol.* **74**, 469–482 (1996).
126. Hoshi, E. & Tanji, J. Differential involvement of neurons in the dorsal and ventral premotor cortex during processing of visual signals for action planning. *J. Neurophysiol.* **95**, 3596–3616 (2006).
The latest in a series of excellent electrophysiological studies on the premotor cortex in monkeys; presents a well-supported hypothesis for how the ventral and dorsal premotor cortex are involved in sensory–motor integration.
127. Kakei, S., Hoffman, D. S. & Strick, P. L. Direction of action is represented in the ventral premotor cortex. *Nature Neurosci.* **4**, 1020–1025 (2001).
128. Murata, A. *et al.* Object representation in the ventral premotor cortex (area F5) of the monkey. *J. Neurophysiol.* **78**, 2226–2230 (1997).
129. Rizzolatti, G., Fogassi, L. & Gallese, V. Motor and cognitive functions of the ventral premotor cortex. *Curr. Opin. Neurobiol.* **12**, 149–154 (2002).
130. Boussaoud, D. & Wise, S. P. Primate frontal cortex: neuronal activity following attentional versus intentional cues. *Exp. Brain Res.* **95**, 15–27 (1993).
131. Kurata, K. Information processing for motor control in primate premotor cortex. *Behav. Brain Res.* **61**, 135–142 (1994).
132. Cisek, P. & Kalaska, J. F. Neural correlates of mental rehearsal in dorsal premotor cortex. *Nature* **431**, 993–996 (2004).
133. Petrides, M. in *From monkey brain to human brain*. (eds Dehaene, S., Duhamel, J. R., Hauser, M. D. & Rizzolatti, G.) 293–314 (MIT Press, Cambridge, Massachusetts, 2005).
134. Halsband, U., Ito, N., Tanji, J. & Freund, H. J. The role of premotor cortex and the supplementary motor area in the temporal control of movement in man. *Brain* **116**, 243–266 (1993).
135. Passingham, R. E. Premotor cortex: sensory cues and movement. *Behav. Brain Res.* **18**, 175–185 (1985).
136. Petrides, M. Deficits in non-spatial conditional associative learning after periarcuate lesions in the monkey. *Behav. Brain Res.* **16**, 95–101 (1985).
137. Schluter, N. D., Rushworth, M. F., Passingham, R. E. & Mills, K. R. Temporary interference in human lateral premotor cortex suggests dominance for the selection of movements. A study using transcranial magnetic stimulation. *Brain* **121**, 785–799 (1998).
138. Bermudez, P. & Zatorre, R. J. Conditional associative memory for musical stimuli in nonmusicians: implications for absolute pitch. *J. Neurosci.* **25**, 7718–7723 (2005).
139. Kurata, K. & Hoffman, D. S. Differential effects of muscimol microinjection into dorsal and ventral aspects of the premotor cortex of monkeys. *J. Neurophysiol.* **71**, 1151–1164 (1994).
140. Davare, M., Andres, M., Cosnard, G., Thonnard, J. L. & Olivier, E. Dissociating the role of ventral and dorsal premotor cortex in precision grasping. *J. Neurosci.* **26**, 2260–2268 (2006).
141. Huron, D. *Sweet Anticipation. Music and the Psychology of Expectation* (MIT Press, Cambridge, Massachusettes, 2006).
142. Buccino, G. *et al.* Action observation activates premotor and parietal areas in a somatotopic manner: an fMRI study. *Eur. J. Neurosci.* **13**, 400–404 (2001).
143. Graziano, M. S., Taylor, C. S., Moore, T. & Cooke, D. F. The cortical control of movement revisited. *Neuron* **36**, 349–362 (2002).
144. Dum, R. P. & Strick, P. L. Frontal lobe inputs to the digit representations of the motor areas on the lateral surface of the hemisphere. *J. Neurosci.* **25**, 1375–1386 (2005).
145. Fiebach, C. J. & Schubotz, R. I. Dynamic anticipatory processing of hierarchical sequential events: a common role for Broca's area and ventral premotor cortex across domains? *Cortex* **42**, 499–502 (2006).
146. Koechlin, E., Ody, C. & Kouneiher, F. The architecture of cognitive control in the human prefrontal cortex. *Science* **302**, 1181–1185 (2003).
147. Koechlin, E. & Jubault, T. Broca's area and the hierarchical organization of human behaviour. *Neuron* **50**, 963–974 (2006).
148. Petrides, M. Lateral prefrontal cortex: architectonic and functional organization. *Philos. Trans. R. Soc. Lond. B Biol. Sci.* **360**, 781–795 (2005).
149. Gaser, C. & Schlaug, G. Brain structures differ between musicians and non-musicians. *J. Neurosci.* **23**, 9240–9245 (2003).
150. Schneider, P. *et al.* Morphology of Heschl's gyrus reflects enhanced activation in the auditory cortex of musicians. *Nature Neurosci.* **5**, 688–694 (2002).
151. Elbert, T., Pantev, C., Wienbruch, C., Rockstroh, B. & Taub, E. Increased cortical representation of the fingers of the left hand in string players. *Science* **270**, 305–307 (1995).
152. Schlaug, G., Jancke, L., Huang, Y., Staiger, J. F. & Steinmetz, H. Increased corpus callosum size in musicians. *Neuropsychologia* **33**, 1047–1055 (1995).
153. Watanabe, D., Savion-Lemieux, T. & Penhune, V. B. The effect of early musical training on adult motor performance: Evidence for a sensitive period in motor learning. *Exp. Brain Res.* **176**, 332–340 (2007).
154. Hutchinson, S., Lee, L. H., Gaab, N. & Schlaug, G. Cerebellar Volume of Musicians. *Cereb. Cortex* **13**, 943–949 (2003).
155. Bengtsson, S. L. *et al.* Extensive piano practicing has regionally specific effects on white matter development. *Nature Neurosci.* **8**, 1148–1150 (2005).
156. Chavis, D. A. & Pandya, D. N. Further observations on corticofrontal connections in the rhesus monkey. *Brain Res.* **117**, 369–386 (1976).
157. Luppino, G., Calzavara, R., Rozzi, S. & Matelli, M. Projections from the superior temporal sulcus to the agranular frontal cortex in the macaque. *Eur. J. Neurosci.* **14**, 1035–1040 (2001).
158. Petrides, M. & Pandya, D. N. Efferent association pathways originating in the caudal prefrontal cortex in the macaque monkey. *J. Comp. Neurol.* **498**, 227–251 (2006).
159. Petrides, M. & Pandya, D. N. Association fiber pathways to the frontal cortex from the superior temporal region in the Rhesus monkey. *J. Comp. Neurol.* **273**, 52–66 (1988).
160. Deacon, T. W. Cortical connections of the inferior arcuate sulcus cortex in the macaque brain. *Brain Res.* **573**, 8–26 (1992).
161. Pandya, D. N. & Yeterian, E. H. Comparison of prefrontal architecture and connections. *Philos. Trans. R. Soc. Lond. B Biol. Sci.* **351**, 1423–1432 (1996).
162. Petrides, M. & Pandya, D. N. in *Principles of Frontal Lobe Function* (eds Stuss, D. T. & Knight, R. T.) 31–50 (Oxford University Press, Oxford, 2002).
163. Barbas, H. & Pandya, D. N. Architecture and frontal cortical connections of the premotor cortex (area 6) in the rhesus monkey. *J. Comp. Neurol.* **256**, 211–228 (1987).
164. Lu, M. T., Preston, J. B. & Strick, P. L. Interconnections between the prefrontal cortex and the premotor areas in the frontal lobe. *J. Comp. Neurol.* **341**, 375–392 (1994).
165. Luppino, G., Rozzi, S., Calzavara, R. & Matelli, M. Prefrontal and agranular cingulate projections to the dorsal premotor areas F2 and F7 in the macaque monkey. *Eur. J. Neurosci.* **17**, 559–578 (2003).
166. Luppino, G., Matelli, M., Camarda, R. & Rizzolatti, G. Corticocortical connections of area F3 (SMA-proper) and area F6 (pre-SMA) in the macaque monkey. *J. Comp. Neurol.* **338**, 114–140 (1993).
167. Mesulam, M. M. & Mufson, E. J. in *Cerebral Cortex* (eds Peters, A. A. & Jones, E. G.) 179–226 (Plenum Press, New York, 1985).
168. Seltzer, B. & Pandya, D. N. Frontal lobe connections of the superior temporal sulcus in the rhesus monkey. *J. Comp. Neurol.* **281**, 97–113 (1989).
169. Juslin, P. N. & Sloboda, J. A. *Music and Emotion: Theory and Research* (Oxford University Press, Oxford, UK, 2001).
170. Krumhansl, C. L. An exploratory study of musical emotions and psychophysiology. *Can. J. Exp. Psychol.* **51**, 336–353 (1997).
171. Blood, A. J. & Zatorre, R. J. Intensely pleasurable responses to music correlate with activity in brain regions implicated in reward and emotion. *Proc. Natl Acad. Sci. USA* **98**, 11818–11823 (2001).
172. de Gelder, B. Towards the neurobiology of emotional body language. *Nature Rev. Neurosci.* **7**, 242–249 (2006).
173. Juslin, P. N. in *Musical Communication* (eds. Miell, D., MacDonald, R. & Hargreaves, D.) 85–115 (Oxford University Press, New York, 2005).
174. Molnar-Szakacs, I. & Overy, K. Music and mirror neurons: from motion to 'e'motion. *Soc. Cogn. Affect. Neurosci.* **1**, 235–241 (2006).
175. Belin, P., Zatorre, R. J., Hoge, R., Evans, A. C. & Pike, B. Event-related fMRI of the auditory cortex. *NeuroImage* **10**, 417–429 (1999).

Acknowledgments

The authors acknowledge ongoing research support from the Canadian Institutes of Health Research, the Natural Sciences and Engineering Research Council, and the Fonds de la Recherche en Santé du Québec. We thank C. Palmer for helpful comments on an earlier draft.

Competing interests statement

The authors declare no competing financial interests.

FURTHER INFORMATION

Robert J. Zatorre's homepage: http://www.zlab.mcgill.ca

Access to this links box is available online.